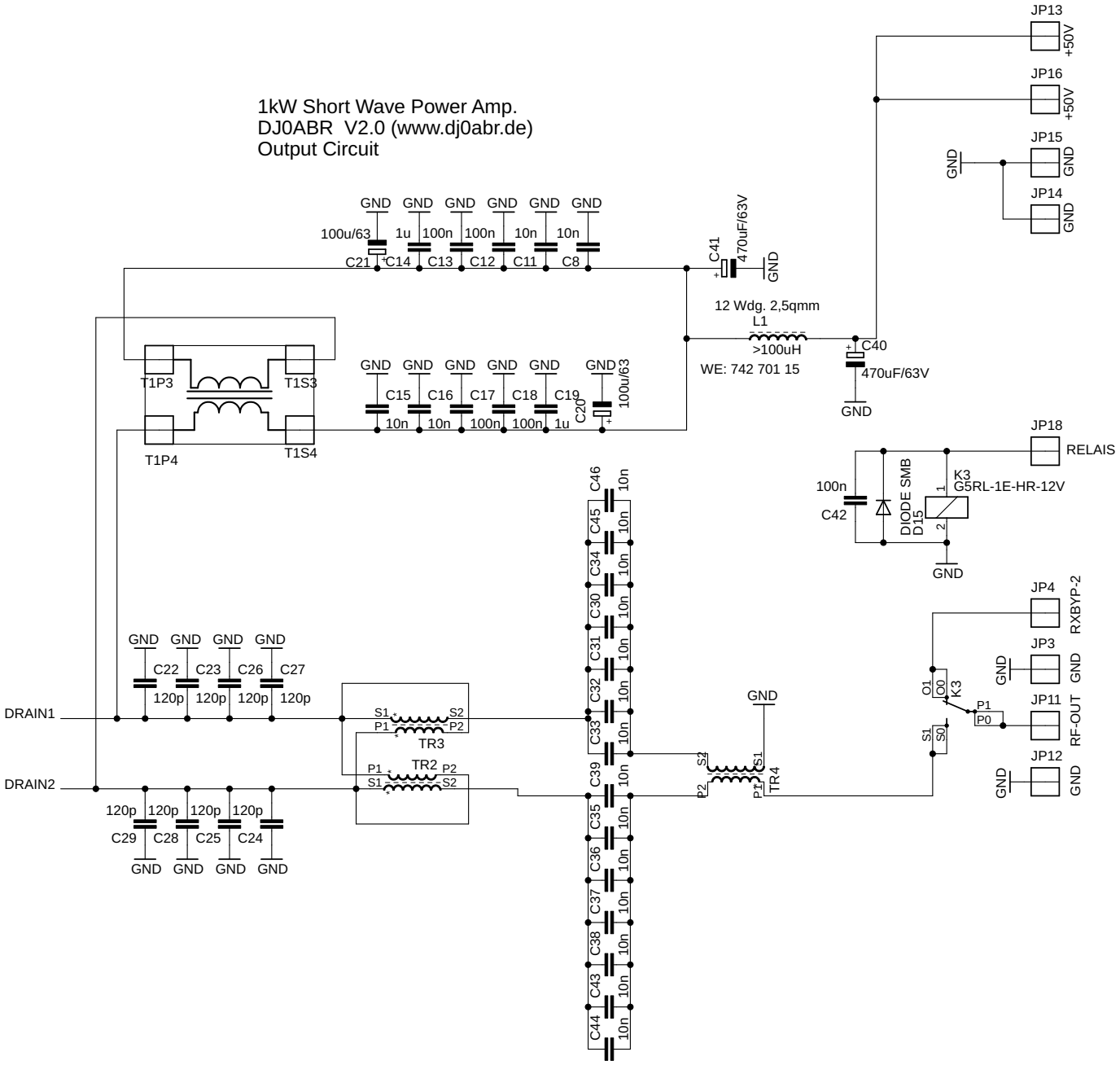
1kW Short Wave Power Amp.
DJ0ABR V2.0 (www.dj0abr.de)
Output Circuit
JP13
+50V
JP16
+50V
JP15
GND
JP14
GND
GND
C21
100u/63
C14
1u
C13
100n
C12
100n
C11
10n
C8
10n
C41
470uF/63V
12 Wdg. 2,5qmm
L1
>100uH
WE: 742 701 15
C40
470uF/63V
T1P3
T1S3
T1P4
T1S4
C15
10n
C16
10n
C17
100n
C18
100n
C19
1u
C20
100u/63
JP18
RELAIS
100n
C42
DIODE SMB
D15
K3
G5RL-1E-HR-12V
C46
C45
C34
C30
C31
C32
C33
C39
C35
C36
C37
C38
C43
C44
C22
120p
C23
120p
C26
120p
C27
120p
DRAIN1
DRAIN2
TR3
TR2
TR4
C29
120p
C28
120p
C25
120p
C24
120p
JP4
RXBYP-2
JP3
GND
JP11
RF-OUT
JP12
GND
K3
P1
P0
O1
O0
S1
S0