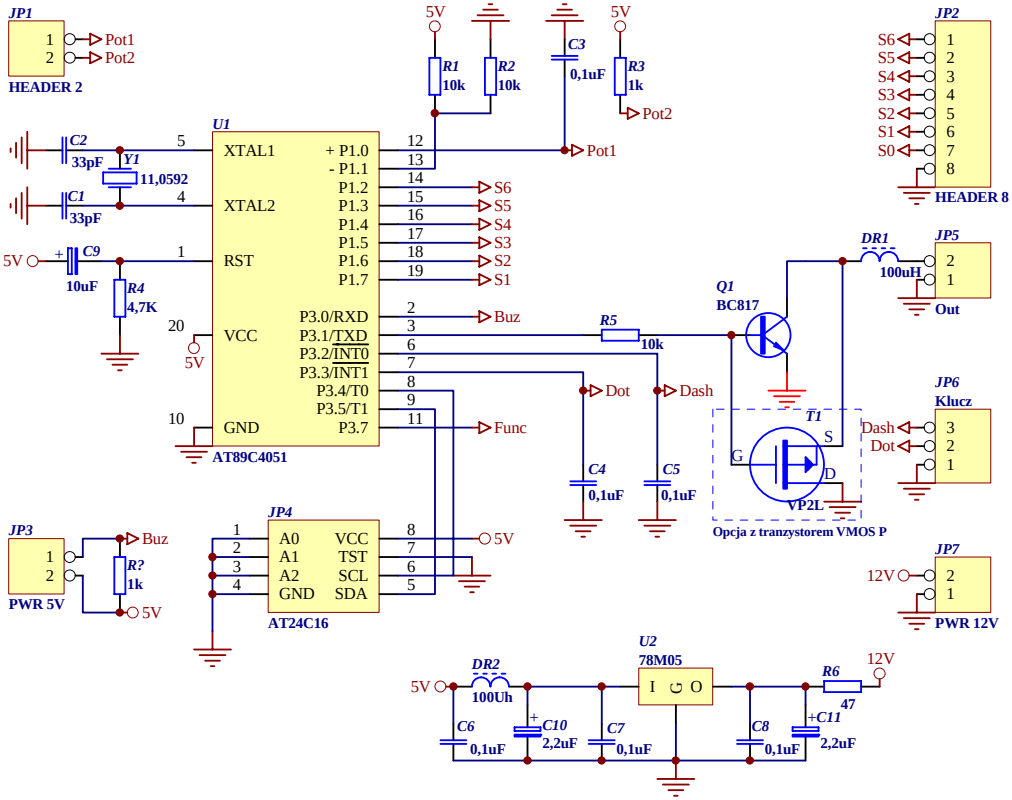
JP1
HEADER 2
Pot1
Pot2
5V
R1
10k
R2
10k
C3
0,1uF
R3
1k
Pot2
Pot1
JP2
S6
S5
S4
S3
S2
S1
S0
HEADER 8
U1
C2
33pF
Y1
11,0592
C1
33pF
5V
C9
10uF
R4
4,7K
XTAL1
XTAL2
RST
VCC
GND
+ P1.0
- P1.1
P1.2
P1.3
P1.4
P1.5
P1.6
P1.7
P3.0/RXD
P3.1/TXD
P3.2/INT0
P3.3/INT1
P3.4/T0
P3.5/T1
P3.7
AT89C4051
Buz
R5
10k
Dot
Dash
Func
C4
0,1uF
C5
0,1uF
Q1
BC817
DR1
100uH
JP5
Out
JP6
Klucz
T1
VP2L
Opcja z tranzystorem VMOS P
JP3
PWR 5V
R?
1k
JP4
A0
A1
A2
GND
VCC
TST
SCL
SDA
AT24C16
JP7
12V
PWR 12V
U2
78M05
I
O
DR2
100Uh
C6
0,1uF
C10
2,2uF
C7
0,1uF
C8
0,1uF
C11
2,2uF
R6
47